TP2000 RIBBON MOTOR REPLACEMENT INSTRUCTIONS

Tools Required:

No.2 Phillips screwdriver and Needle Nose Pliers
Wrist strap (or similar device) for ESD grounding

To Replace the Ribbon Motor:

1. Verify that all replacement parts and tools are present.

2. Turn off the power switch, unplug the AC power cord, and disconnect all communication and interface cables.

3. **IMPORTANT: Properly ground yourself using an ESD wrist strap (or similar device) to prevent static discharge damage to the electronics.**

4. Remove two #8-32 Phillips screws from the Top Cover, located in front on bottom side then lift and lock the Cover in place by pushing down the Locking Hinge Bracket, located on the left and inside of Base Assembly.

5. Lift and rotate forward the Ribbon Cartridge until it rests on the Front Stiffener Bracket.

6. Remove the Compression Spring, four #8-32 Phillips screws and both the left and right Ribbon Mounts then lift and flip the Ribbon Motor Bracket Assembly upside down.

7. Remove two #8-32 Phillips screws from the Enclosure Door (located on backside of printer) and carefully open the door until it stops at a horizontal position then disconnect J6 connector from the Main Controller Assembly.

8. Remove two #4-40 hex nuts and the Ribbon Motor from the Ribbon Motor Bracket Assembly. **IMPORTANT: Notice the routing of the Ribbon Motor cable prior to motor removal.**

9. Assemble the new Ribbon Motor to the Ribbon Motor Bracket Assembly with the two #4-40 hex nuts from step 8, reroute and connect the cable from the new motor to J6 connector on the Main Controller Assembly.

10. Close and secure the Enclosure Door with the two #8-32 Phillips screws from step 7, then reassemble all parts previously removed on the printer in reverse order beginning with step 6.

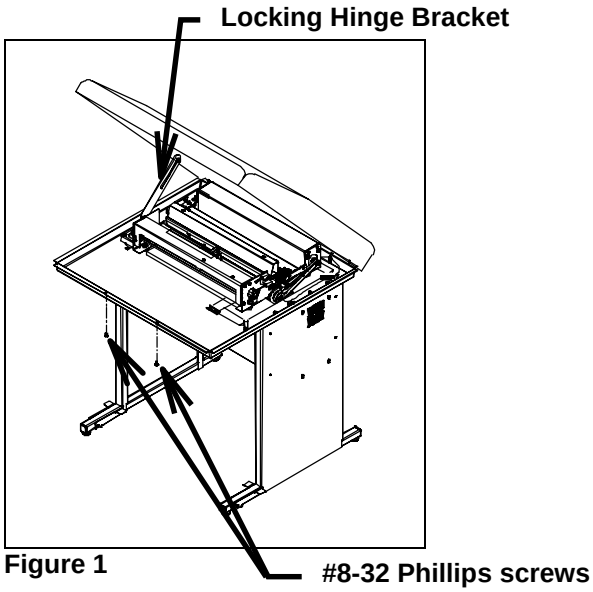

Figure 1

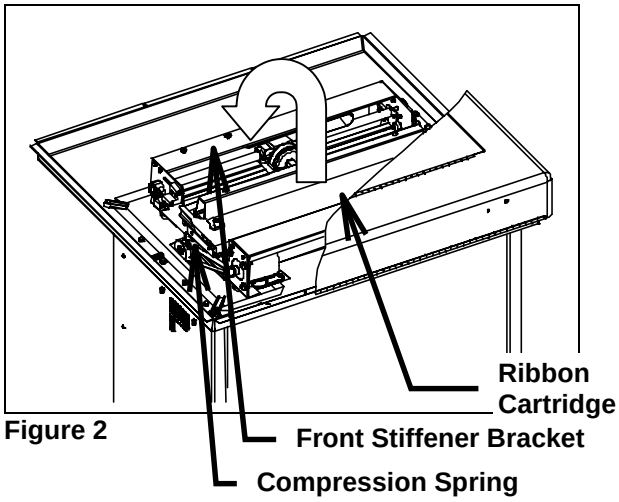

Figure 2

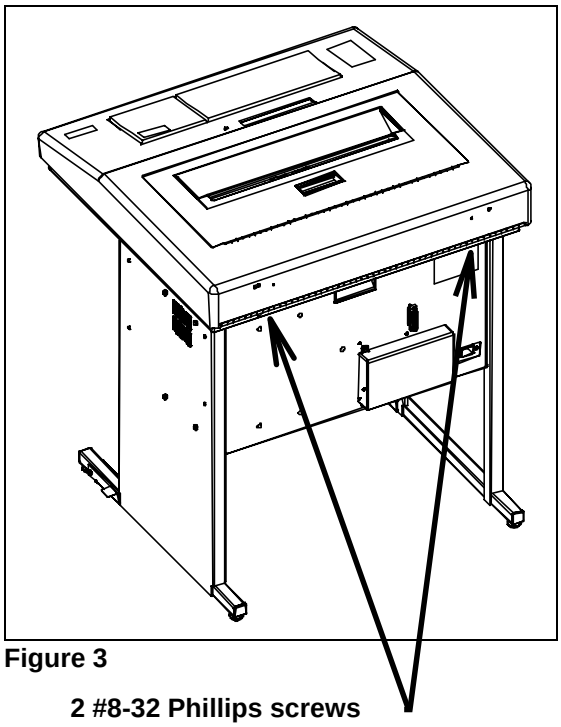

Figure 3

11. Unlock (pull up on Locking Hinge Bracket) and close the Top Cover then secure with two screws from step 4.

12. Reconnect all communication and interface cables, plug in the AC power cord and turn on the power switch.

13. Verify proper functionality by printing a self-test (*refer to the Operations and/or Maintenance Manuals if you need additional information*).

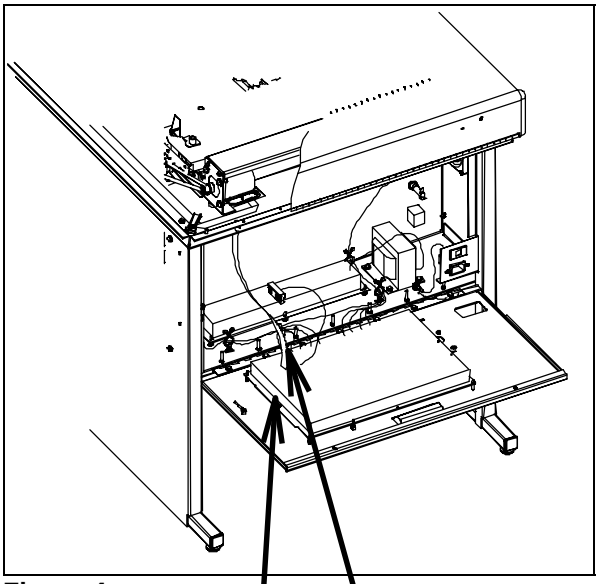

Figure 4

J6 Connector

Main Controller Assembly

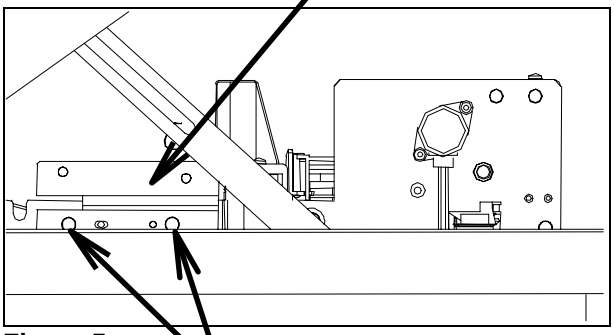

Figure 5

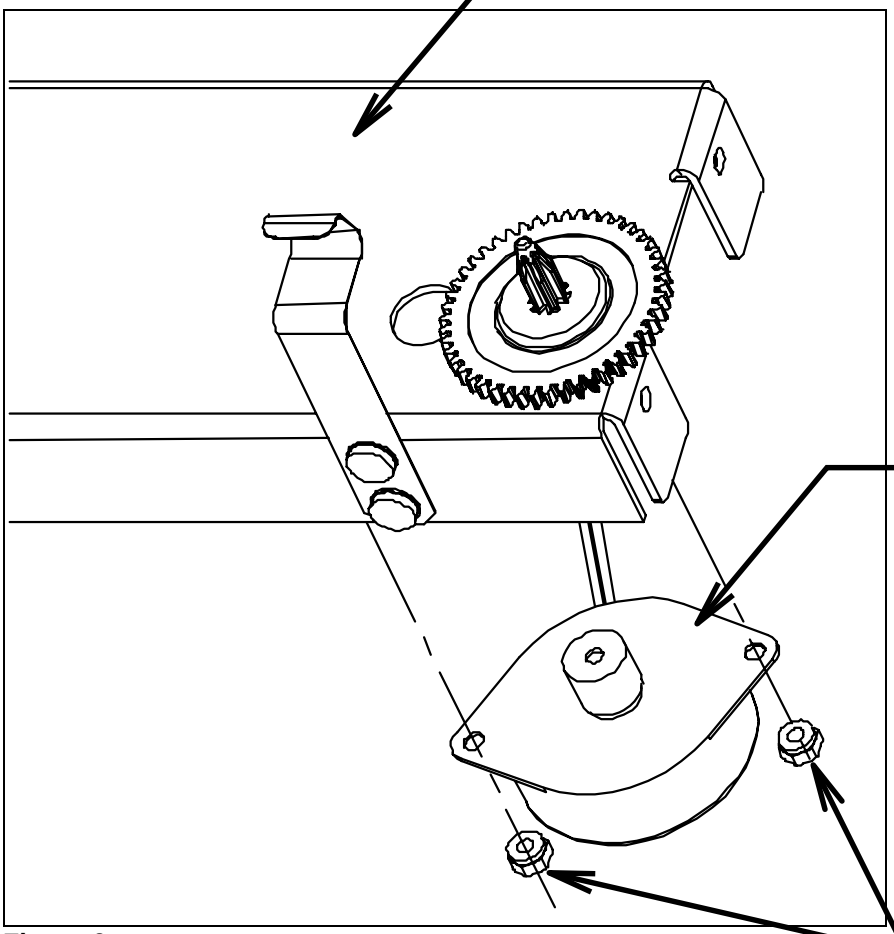

Figure 6